Galltec Mess- und Regeltechnik GmbH
D-71145 Bondorf · Germany
Tel. +49 (0)7457-9453-0 · Fax +49 (0)7457-3758
E-Mail: sensoren@galltec.de · Internet:www.galltec-mela.de

MELA Sensortechnik GmbH
D-07987 Mohlsdorf-Teichwolframsdorf · Germany
Tel. +49(0)3661-62704-0 · Fax +49(0)3661-62704-20
E-mail:mela@melasensor.de · Internet: www.galltec-mela.de

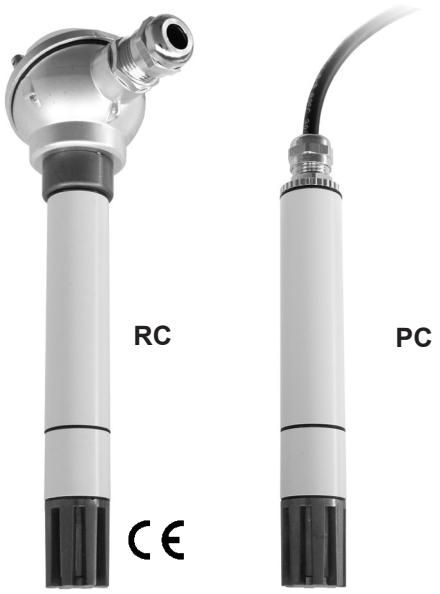

Product info sheet no. C 2.3
Humidity/- temperature sensors
rod-shaped compact sensors

MELA® humidity/-temperature sensors in the PC, PK and RC series are compact, versatile sensors in a rod-type design. They are available with a 1.5 m connecting cable (PC series), without cable (PK series) or with a robust aluminium connecting head and terminal screws (RC series) for measuring relative humidity, relative humidity and temperature or temperature in air and other non-aggressive gases.
The advantages of the series .../9 are its improved dynamics, in particular at low air speeds and also its increased serviece life, even under more challenging operating conditions (pollutant impact or permanent humidity > 95 %rh).
When air speeds are extremely high combined with a high number of particles, using the series .../9 is not recommended. For extreme applications (near the sea, desert, mountains, areas with high air speed etc.) we recommend our stainless steel sinter filter **types ZE 21** resp. **ZE 22** (not recommended for the series .../9, see product info sheet F 5.1).

Technical Data

Output 1: relative humidity

measuring range 1 ..... 0...100% rh
output signal 1 ..... 0...1V, 0...10V or 4...20mA
accuracy (5...95%rh at 10...40°C) ..... ±2% rh
influence of temperature <10°C, >40°C ..... <0.1%/K additional

Output 2: temperature

measuring range 2 ..... -30...+70° C
output signal 2 ..... 0...1V, 0...10V or 4...20mA
accuracy
0...1V (-27...70°C) ..... ±0.2 K
0...10V (-29...70°C) ..... ±0.2 K
4...20mA (PC) ..... -0.3...0.6 K
(depending on the air speed)
4...20mA (RC) ..... ±0.3 K
influence of temperature <10°C, >40°C ..... ±0.007 K/K additional
measuring element (ref. DIN EN 60751) ..... Pt 100 class B
(class 1/3 DIN on request)

Other data

operating temperature ..... -40...+80° C
degree of protection sensor/electronic ..... IP 30/IP 65
operating voltage
current output ..... 12...30V DC
voltage output (0...10V) ..... 15...30V DC
voltage output (0...1V) ..... 6...30V DC
load resistance (0...10V, 0...1V) ..... ≥10 kΩ/≥2 kΩ
load (current output) ..... acc.diagram
power consumption
0...10V, 2 x 0...1V ..... < 5 mA
0...1V ..... <1 mA
minimum air speed always at right angles to the sensor
output signals: 0...10V, 2x 0...1V ..... ≥0.5 m/s
4...20mA, 2x 0...10V ..... ≥1 m/s
2x 4...20mA ..... ≥1.5 m/s
self-heating Pt100 (v=2 m/s in the air) ..... 0.2 K/mW
directive about electromagnetic compatibility **2014/30/EU**
DIN EN 61326-1 ..... issue 07/13
DIN EN 61326-2-3 ..... issue 07/13

Type Versions

Measured variable	Output signals	PC series rod shape	RC series robust design
F rel. humidity	4...20 mA	FP* 3/x	FRC 3/x
	0...10 V	FP* 2/x	FRC 2/x
	0...1 V	FP* 1/x	FRC 1/x
C r.h. + temp.	4...20 mA, Pt100*)	CP* 3/x	CRC 3/x
	0...10 V, Pt100*)	CP* 2/x	CRC 2/x
	0...1 V, Pt100*)	CP* 1/x	CRC 1/x
K r.h. + temp.	2 x 4...20 mA	KP* 3/x	KRC 3/x
	2 x 0...10 V	KP* 2/x	KRC 2/x
	2 x 0...1 V	KP* 1/x	KRC 1/x
T Temperature	Pt100*)	TP* 5/x	TRC 5/x
	4...20 mA	TP* 3/x	TRC 3/x
	0...10 V	TP* 2/x	TRC 2/x
	0...1 V	TP* 1/x	TRC 1/x
Weight		approx. 145 g	approx. 340 g

*) further temperature measuring elements on demand

for
- x=5: gauze filter ZE17
- x=6: stainless steel sinter filter ZE21 [1)]
- x=9: integrated element filter made of PTFE and protective plastic basket ZE16

sensor with 1.5m cable * = C
sensor without cable * = K

[1)] Filters ZE20, ZE21 and ZE22 are ***not suitable*** for sensors of the PC series with ***current output*** !

Special versions available on request

This information is based on current knowledge and is intended to provide details of our products and their possible applications. It does not, therefore, act as a guarantee of specific properties of the products described or of their suitability for a particular application. It is our experience that the equipment may be used across a broad spectrum of applications under the most varied conditions and loads. We cannot appraise every individual case. Purchasers and/or users are responsible for checking the equipment for suitability for any particular application. Any existing industrial rights of protection must be observed. The perfect quality of our products is guaranteed under our General Conditions of Sale. Issue: November 2017 C23_E. Subject to modifications.

User instructions

Install the Mela®-humidity/temperature sensors at a place in the room, plant or equipment where characteristic levels of humidity occur. Avoid installing them close to heaters or windows or against outside walls.
The specified minimum air speeds and the operating voltage-adapted current at current-output (diagram) should be complied with. Deviations may lead to additional corrupted measurement readings because the sensor self-heats.
The sensor can be installed in any position. However, do avoid positions where water can enter. Dew formation and splashes do not damage the sensor, although corrupted measurement readings are recorded until all the moisture on the filter has dried up.
In order to maintain interference immunity in accordance with EN 61326 when it is in use, we recommend that you use a screened cable for connecting the RC and PK series sensors, and have this fitted into the sensor's EMC conduit thread by a qualified electrician.

The protective filters should only be screwed off carefully to check functioning with the humidity standard.
It is important not to touch the highly sensitive sensor element in the process. If necessary, soiled filters can be screwed off and rinsed. When you screw them back on, bear in mind that sensors will not measure accurately again until they are completely dry. Sensors of the series .../9 can be completely and carefully cleaned in distilled water.

For mounting support we recommend the **console type 20.009** or the **attachment plate type ZA 20** (Product info sheet no. F 5.1). In order to check functioning in the place of installation, we recommend that you use the **ZE 31/1-type humidity standard** (product info sheet no. F 5.2).

Please consult the ***application notes for humidity sensing elements*** (product info sheet no. A 1) or check with the manufacturer for further information which you need to bear in mind when using humidity sensors with capacitive sensing elements.

Load at current output

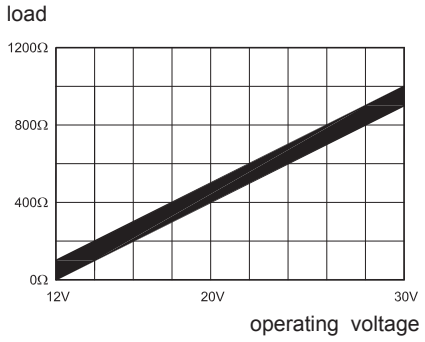

Recommended working range for humidity

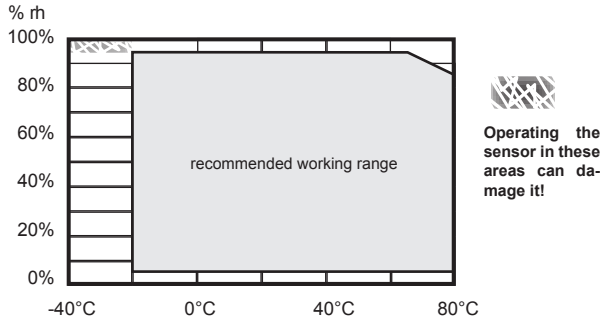

Dimensions

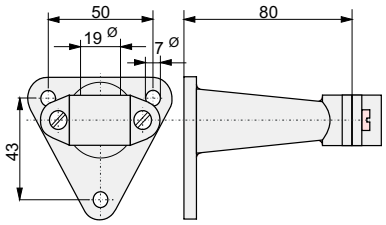

Console for wall mounting 20.009
(please order seperately)

P* series

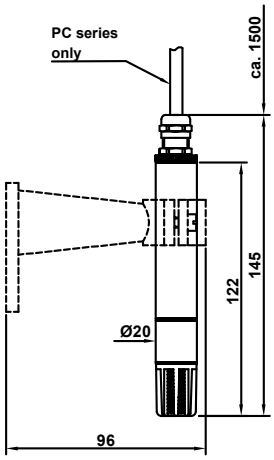

RC series

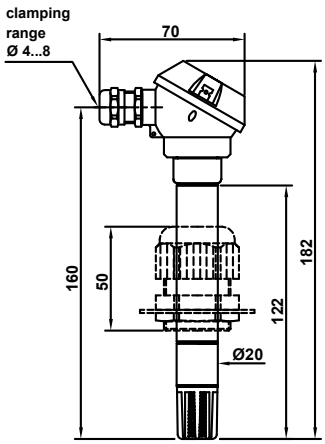

Attachment plate ZA 20
(please order seperately)

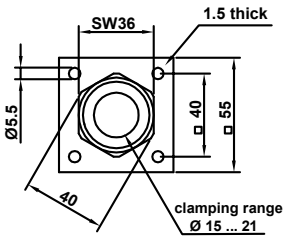

Connection diagram

Humidity/-temperature sensors
Rod-shaped compact sensors PC series

Humidity/-temperature sensor
output: 2 x 0...10V
(KPC 2/x)

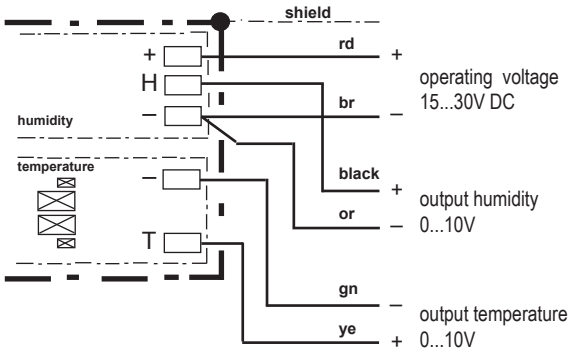

Humidity/-temperature sensor
output: 2 x 0...1V
(KPC 1/x)

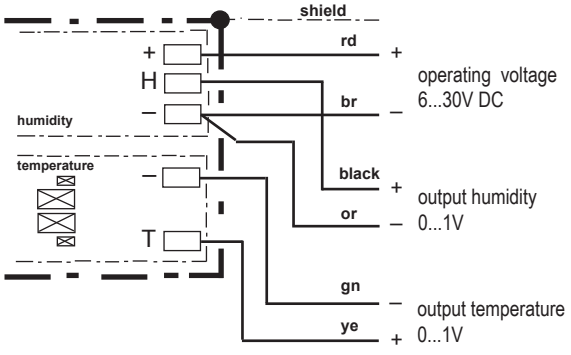

The electrical connection must only be carried out by properly qualified personnel.

Humidity/-temperature sensor
output: 2 x 4...20mA
(KPC 3/x)

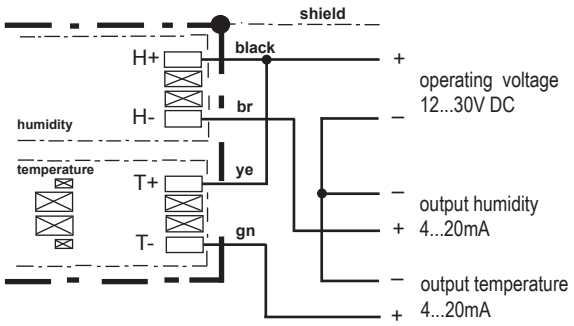

Humidity/-temperature sensor
output: 4...20mA, Pt100
(CPC 3/x)

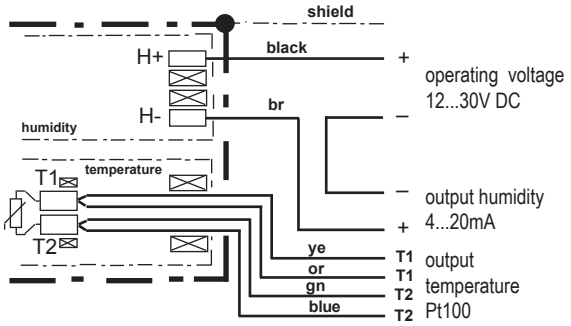

Humidity/-temperature sensor
output: 0...10V, Pt100
(CPC 2/x)

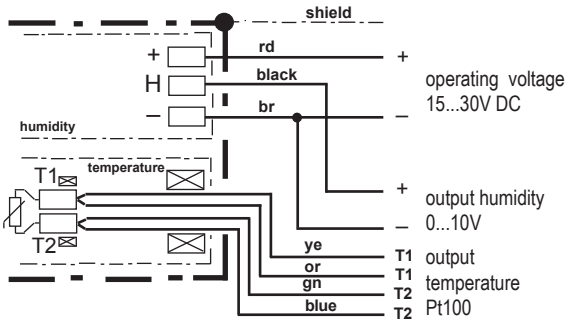

Humidity/-temperature sensor
output: 0...1V, Pt100
(CPC 1/x)

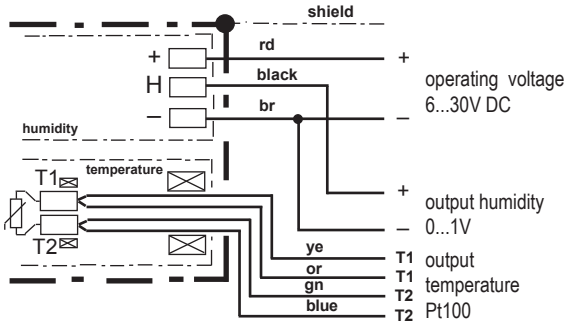

Connection diagram

Humidity/-temperature sensors
Rod-shaped compact sensors PC series

Humidity sensor
output: 0...10V
(FPC 2/x)

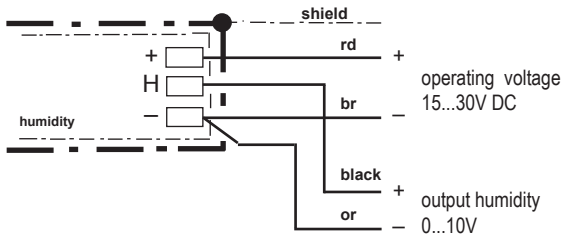

Humidity sensor
output: 0...1V
(FPC 1/x)

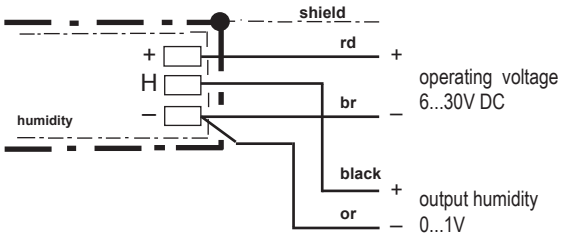

The electrical connection must only be carried out by properly qualified personnel.

Temperature sensor
output: 4...20mA
(TPC 3/x)

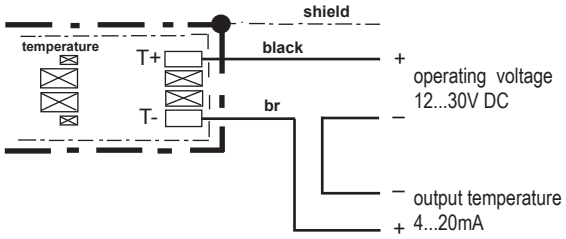

Humidity sensor
output: 4...20mA
(FPC 3/x)

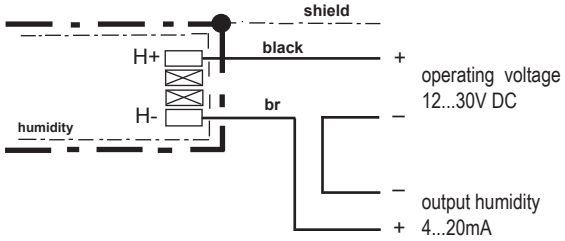

Temperature sensor
output: 0...10V
(TPC 2/x)

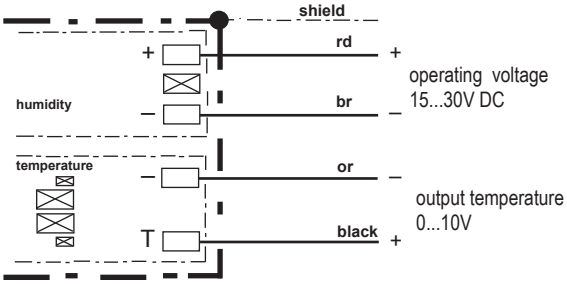

Temperature sensor
output: 0...1V
(TPC 1/5)

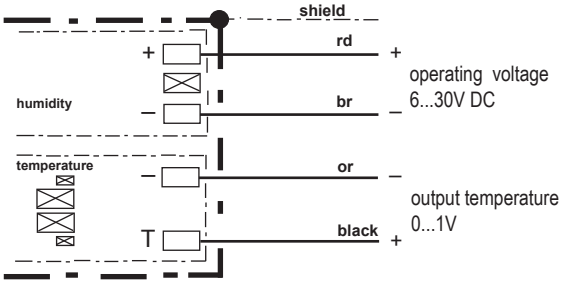

Temperature sensor
output: Pt100
(TPC 5/x)

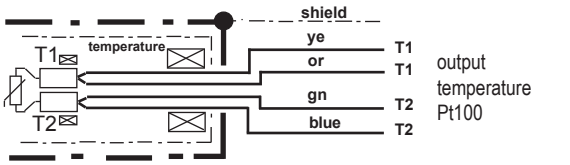

Connection diagram

Humidity/-temperature sensors
Rod-shaped compact sensors PK series

Humidity/-temperature sensor
output: 2 x 0...10V
(KPK 2/x)

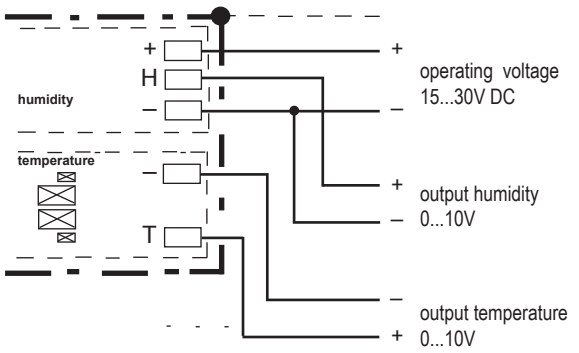

Humidity/-temperature sensor
output: 2 x 0...1V
(KPK 1/x)

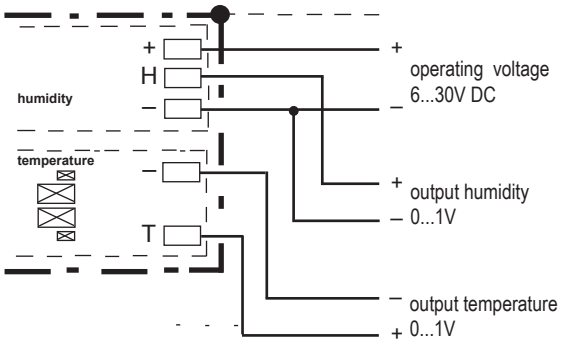

The electrical connection must only be carried out by properly qualified personnel.

Humidity/-temperature sensor
output: 2 x 4...20mA
(KPK 3/x)

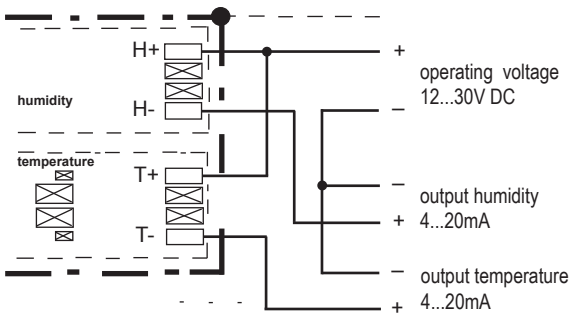

Humidity/-temperature sensor
output: 4...20mA, Pt100
(CPK 3/x)

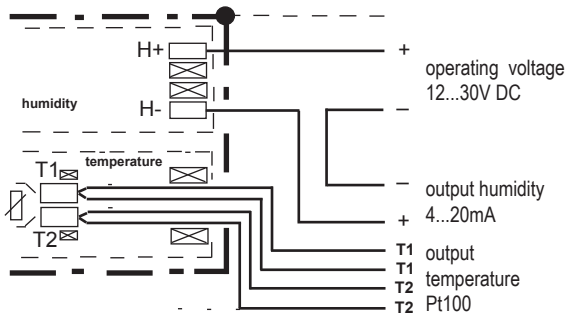

Humidity/-temperature sensor
output: 0...10V, Pt100
(CPK 2/x)

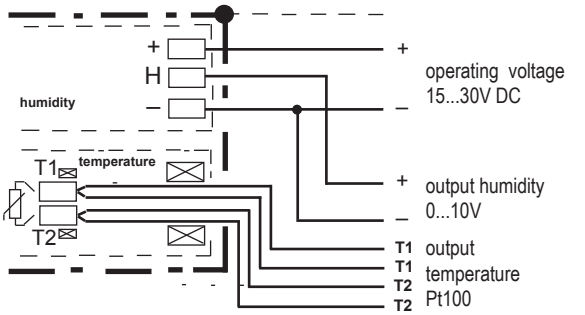

Humidity/-temperature sensor
output: 0...1V, Pt100
(CPK 1/x)

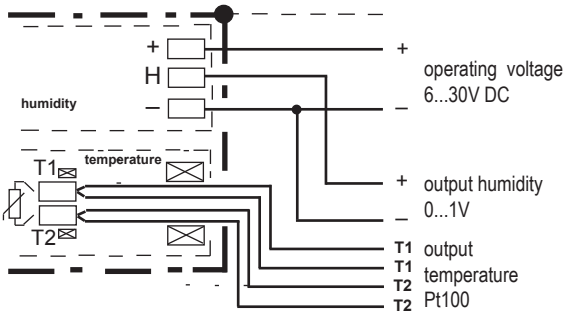

Connection diagram

Humidity/-temperature sensors
Rod-shaped compact sensors PK series

Humidity sensor
output: 0...10V
(FPK 2/x)

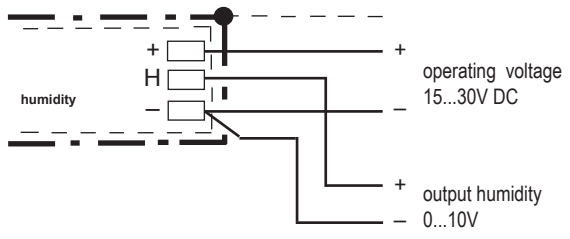

Humidity sensor
output: 0...1V
(FPK 1/x)

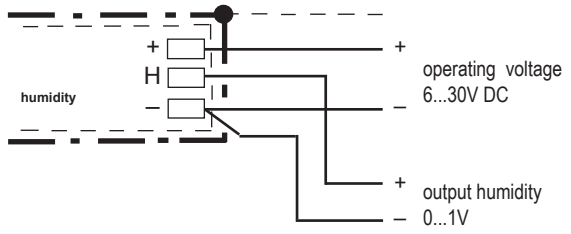

The electrical connection must only be carried out by properly qualified personnel.

Temperature sensor
output: 4...20mA
(TPK 3/x)

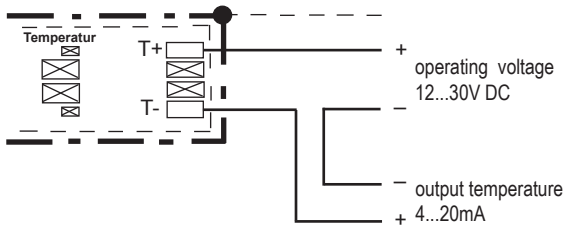

Humidity sensor
output: 4...20mA
(FPK 3/x)

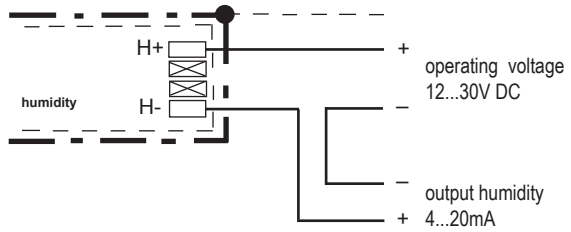

Temperature sensor
output: 0...10V
(TPK 2/x)

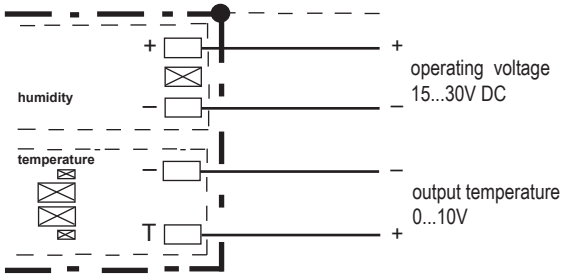

Temperature sensor
output: 0...1V
(TPK 1/x)

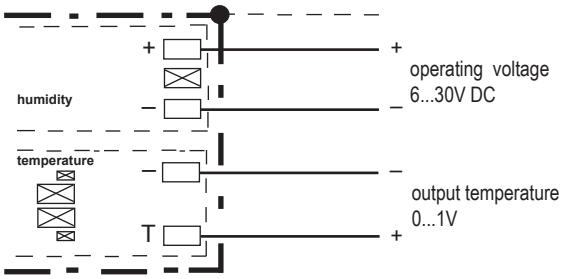

Temperature sensor
output: Pt100
(TPK 5/x)

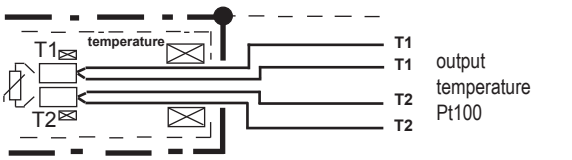

Connection diagram

Humidity/-temperature sensors
Rod-shaped compact sensors RC series

Humidity/-temperature sensor
output: 2 x 0...10V
(KRC 2/x)

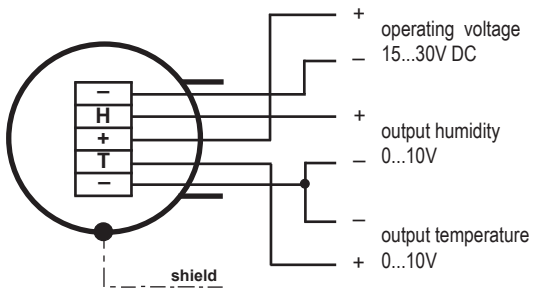

Humidity/-temperature sensor
output: 2 x 0...1V
(KRC 1/x)

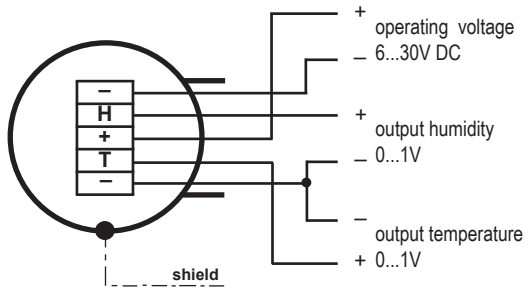

The electrical connection must only be carried out by properly qualified personnel.

Humidity/-temperature sensor
output: 2 x 4...20mA
(KRC 3/x)

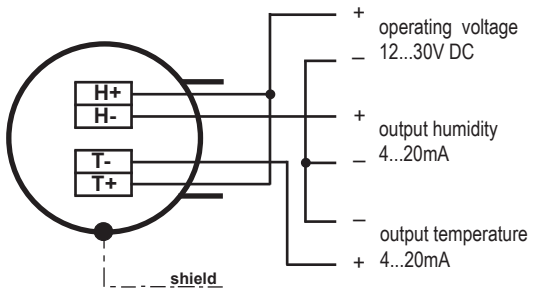

Humidity/-temperature sensor
output: 4...20mA, Pt100
(CRC 3/x)

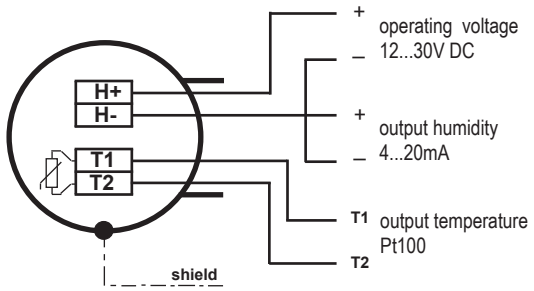

Humidity/-temperature sensor
output: 0...10V, Pt100
(CRC 2/x)

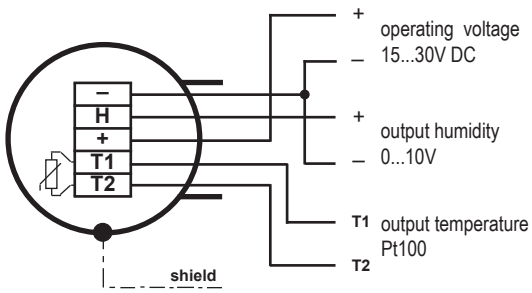

Humidity/-temperature sensor
output: 0...1V, Pt100
(CRC 1/x)

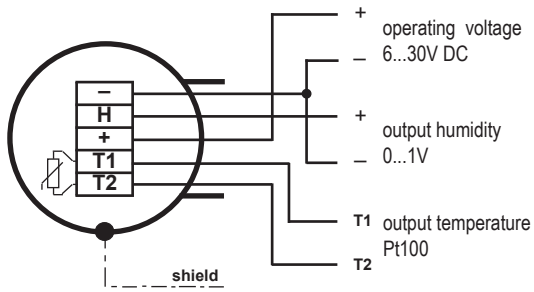

Connection diagram

Humidity/-temperature sensors
Rod-shaped compact sensors RC series

Humidity sensor
output: 0...10V
(FRC 2/x)

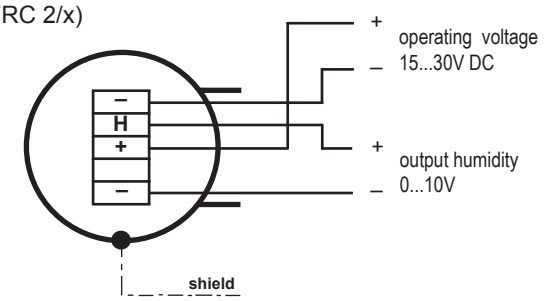

Humidity sensor
output: 0...1V
(FRC 1/x)

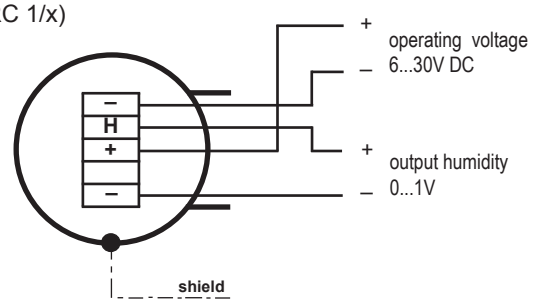

The electrical connection must only be carried out by properly qualified personnel.

Temperature sensor
output: 4...20mA
(TRC 3/x)

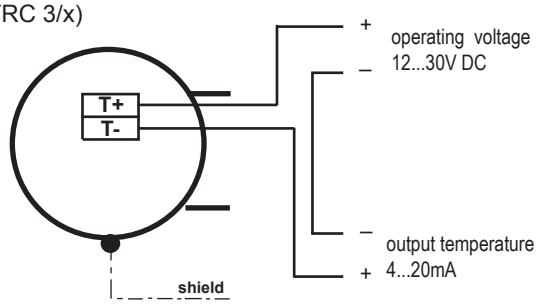

Humidity sensor
output: 4...20mA
(FRC 3/x)

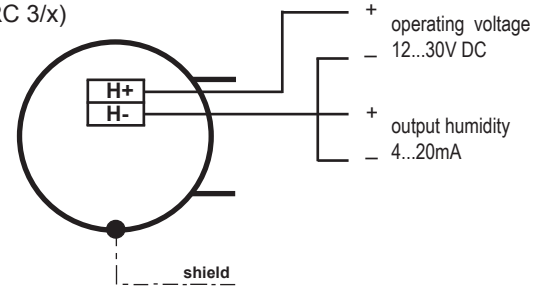

Temperature sensor
output: 0...10V
(TRC 2/x)

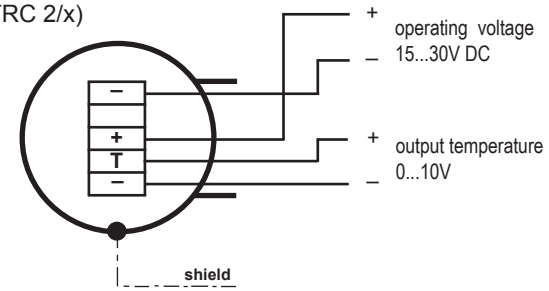

Temperature sensor
output: 0...1V
(TRC 1/x)

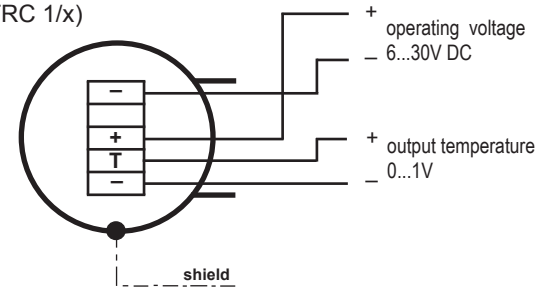

Temperature sensor
output: Pt100
(TRC 5/x)